Woodend

WOODEND (48 1/2 MILES)

Woodend was the terminus of the second section of line to Bendigo and was opened in 1861; the line was extended to Kyneton in 1862. Situated just north of the summit of the line, Woodend was, for most of its life, an important railway centre with trains being combined to work down the hill in both directions (this became less important from the '20s with the introduction of more powerful locomotives). Woodend was also the source and terminus of the roadside trains that worked north and south on the main line and to Daylesford. The Daylesford line trains also originated and terminated at Woodend (the actual junction was at Carlsruhe, the next station north). Block working (using the telegraph instrument) was introduced down the hill to Sunbury by 1879; by 1885 block working was in force on both lines from Sunbury, and block instruments had been provided by 1888. Block working was extended north by 1892. Woodend was interlocked in 1891 and the arrangement provided that year remained recognisable for 99 years. The box lasted until 1995 when it was replaced by a signalbay on the Up platform.

02.11.1860 Contract let for pumping equipment, WI tanks, etc for water supply at Sunbury, Gisborne, & Woodend to William Crossley for £4908/7/0 (GG) (extra £250 on pumping apparatus 14.6.61)
29.01.1860 Contract let for removal of station from Sunbury to Woodend to William Cain for £4775/0/0 (GG)
23.04.1861 Contract let for erection of engine house at Jackson's Creek (Woodend) and Middle Gully to John Bett for £656/12/4 (GG)
03.05.1861 Contract let for forming & metalling roads, pitching water channels, etc to James Mills for £2195/9/0 (GG)
28.05.1861 Contract let for erection of carriage, engine & coke sheds to William Murray for £2662/11/10 (GG)
08.07.1861 Line opened Sunbury - Woodend (VR62)
25.04.1862 Line opened Woodend - Kyneton (VR62)
30.10.1863 Contract let for removal of part of the sheds to Williamstown (removal of goods sheds & re-erection as loco shed) to Samuel Amess for £4345/14/6 (GG, additional £550 30.3.64)
(01.12.1879) Block (worked by telegraph) on Up line section Woodend - Macedon (WTT)
(03.12.1885) Telegraph Block (both directions) Macedon - Woodend. Woodend to report departure of all Down trains to Elphinstone (since 1.12.82) (WTT)
20.05.1887 Contract let for erection of Turntable to AP Tozer & Co for £185/0/0 (GG)
(01.10.1888) Block working (with Block Instruments) Macedon - Woodend (since 19.12.87) (WTT)
30.05.1890 Contract let for erection of signalbox to JJ Smith for £233/5/0 (GG)
18.06.1891 Interlocked. 37 lever Rocker frame provided (5 spare). The diagram below is of the layout as designed by McKenzie and Holland; the actual installation appears to have resited some signals. (IR)

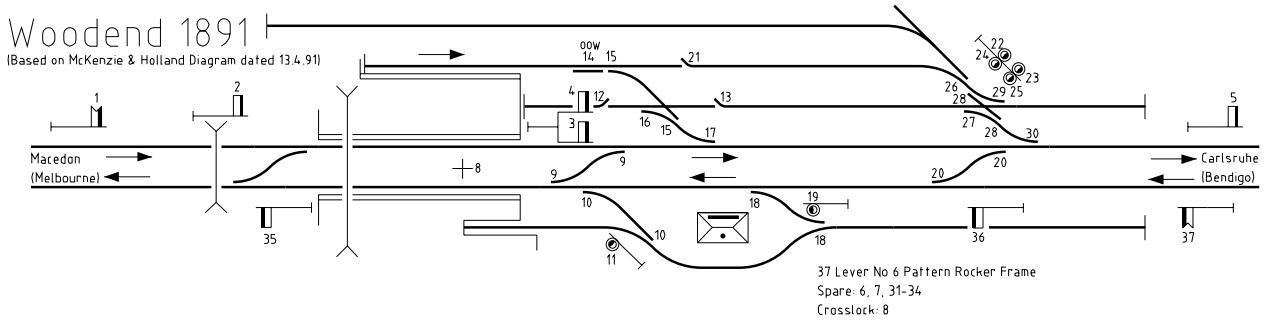

05.08.1891 Alterations account Points 31. This may indicate the provision of Siding Signal 21 (from Loco Roads) and Catch 21 now worked by lever 31. (IR)
04.11.1891 Alterations account Home 5 (IR)
(09.05.1892) Block working (with Block Instruments) Woodend - Carlsruhe (since 11.08.90) (WTT)
26.02.1897 Contract let for removal of Gatehouses 13 & 23 (Shelbourne line) & re-erection as SM's house at Woodend to Lafus & Attenborough for £183/19/6 (GG)
10.12.1897 Station building destroyed by fire (WN 25)
01.07.1899 By this date frame contains 15 signal levers, 15 point levers, 1 fpl, 1 crosslock, and 5 spare (IR)
26.08.1898 Contract let for erection of station buildings to FE Shillabeer for £3191/11/5 (GG)
22.09.1899 Contract let for construction of iron verandah to A Challingsworth for £245/17/6 (GG)
(27.08.1906) Post 6 moved 10 yards further out (WN 35)
(10.09.1906) Post 9 moved 50 yards further out (WN 37)
(22.07.1907) Down Distant 200 yards further in (WN 29)
28.08.1907 Contract let for erection of turntable to Wilson & Sly for £348/0/0 (GG)
18.11.1908 Contract let for manufacture of a traverser for goods yard to A Roberts & Sons for £157/10/0 (GG)

Copyright 2001, Andrew Waugh. Non commercial reproduction is permitted. Corrections and additions welcome. Please contact the author at 25 Grieve St West Macleod VIC 3085.

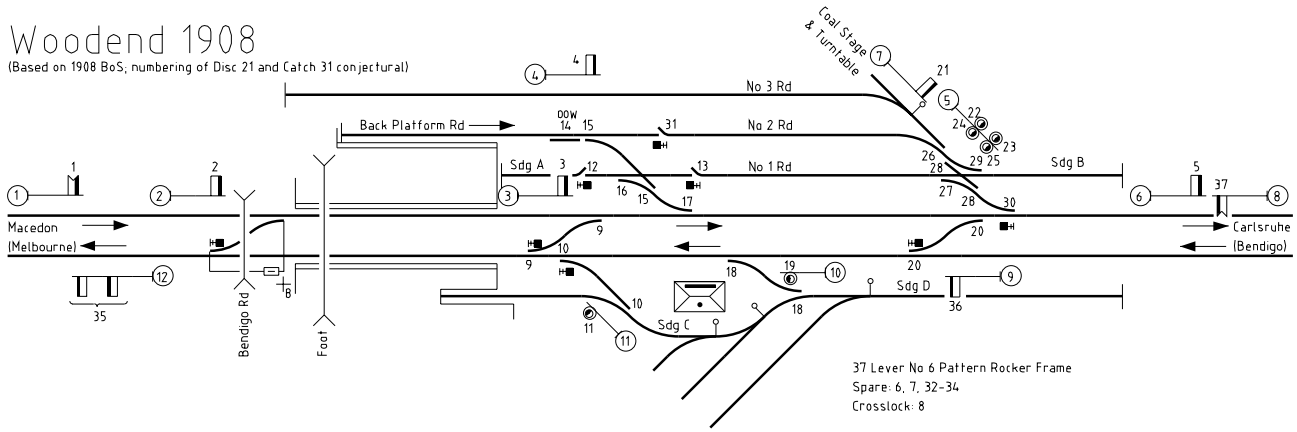

23.06.1911 Ground Disc 7 (Post 3A) provided (Up line to Down line) and Point Indicator on Points 9U removed. Disc 32 provided on Post new 5A (Down line to Sidings 1, 2, or 3) and Point Indicator on Points 30 removed. Disc replaced arm on Post 7. Point Indicator provided on Points 29. Now 3 spare levers. (WN 26, IR)

(22.04.1912) Co-acting arm provided for Down Distant on new Post 1A situated on left hand side of line opposite Post 1 (WN 17)

(30.03.1914) Post 2 moved 77 yards further out (WN 13)

(14.06.1915) Additional disc (Disc 33) provided on Post 5A (Siding B to Sidings 1, 2, or 3) (WN 24)

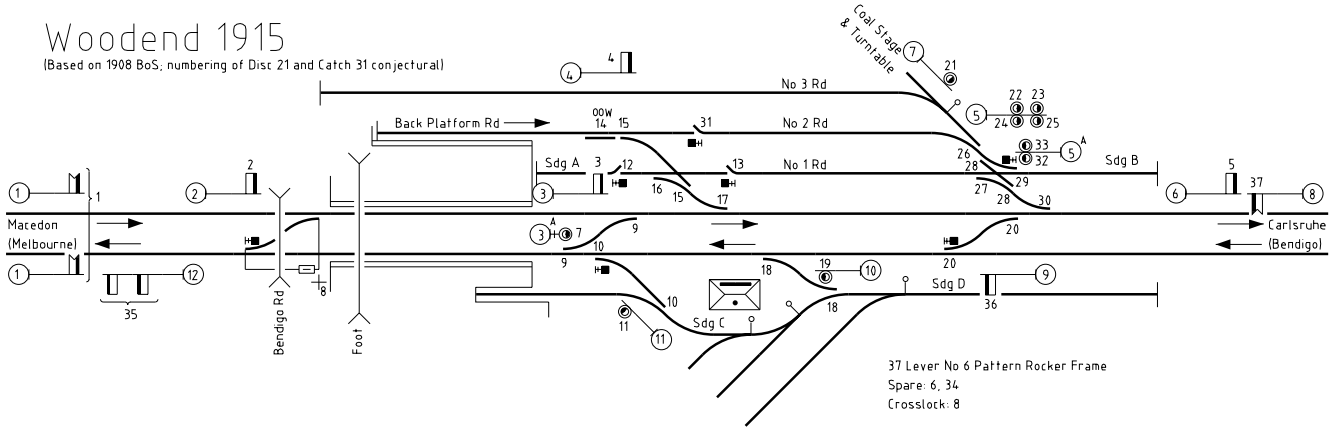

18.08.1915 Tenders called for supply of MS girders etc for renewal of bridge at 47-31-69 (GG)

01.10.1918 Machine timbers renewed by works branch and machine tested (IR)

15.06.1923 Post 1, Co-acting Down Distant (high post), abolished (WN 26)

19.06.1923 Post 9 replaced by a new post 160 yards further out (WN 26*)

20.06.1923 Post 8 moved 160 yards further out (WN 26*)

12.07.1923 Frame extended by 5 levers at right hand end. Signals 35, 36, & 37 renumbered 39, 41, & 42 respectively. Additional Ground Disc (Disc 6) provided on Ground Disc 3A (Up line to Sidings C). Ground Discs 3B (Disc 34) and 4B (Disc 35) provided. Additional Up Home signal (Home 40) provided on new Post 11B. Catch points in Up line 160 yards further out (WN 30, IR)

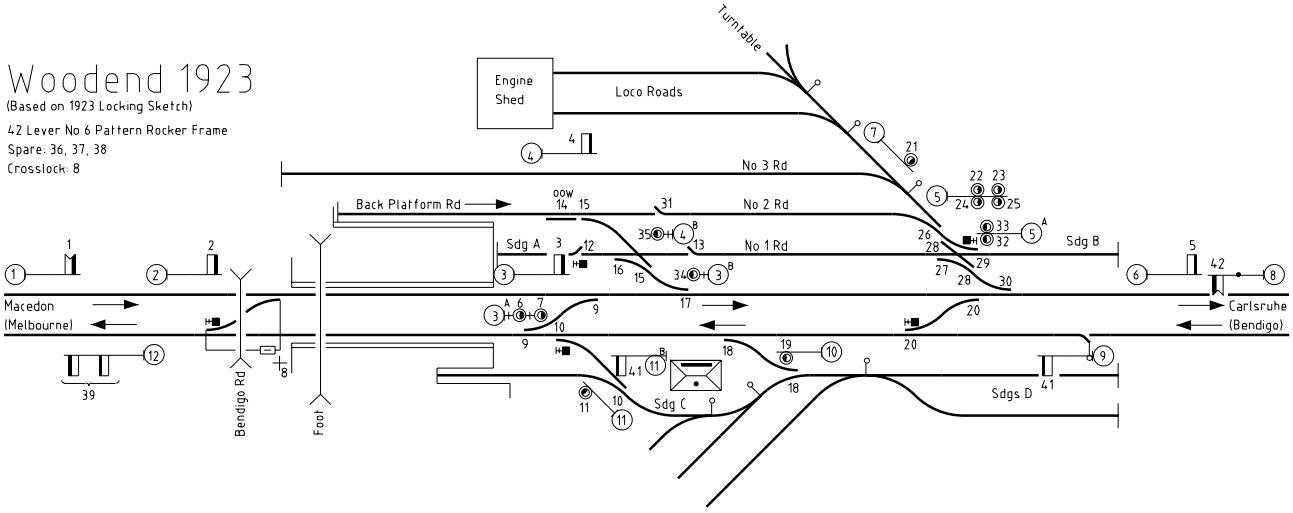

 Copyright 2001, Andrew Waugh

18.11.1924 Points 27 now worked by lever 30. Hand points in No 3 Road leading to Loco Road connected to interlocking as Points 27. Post 5 (Discs 22, 23, 24, & 25) abolished. Ground Discs 5 (Disc 24) and 7B (Disc 25) provided. Additional disc (Disc 22) provided on Post 7. Lever 23 now spare. (WN 48, IR)

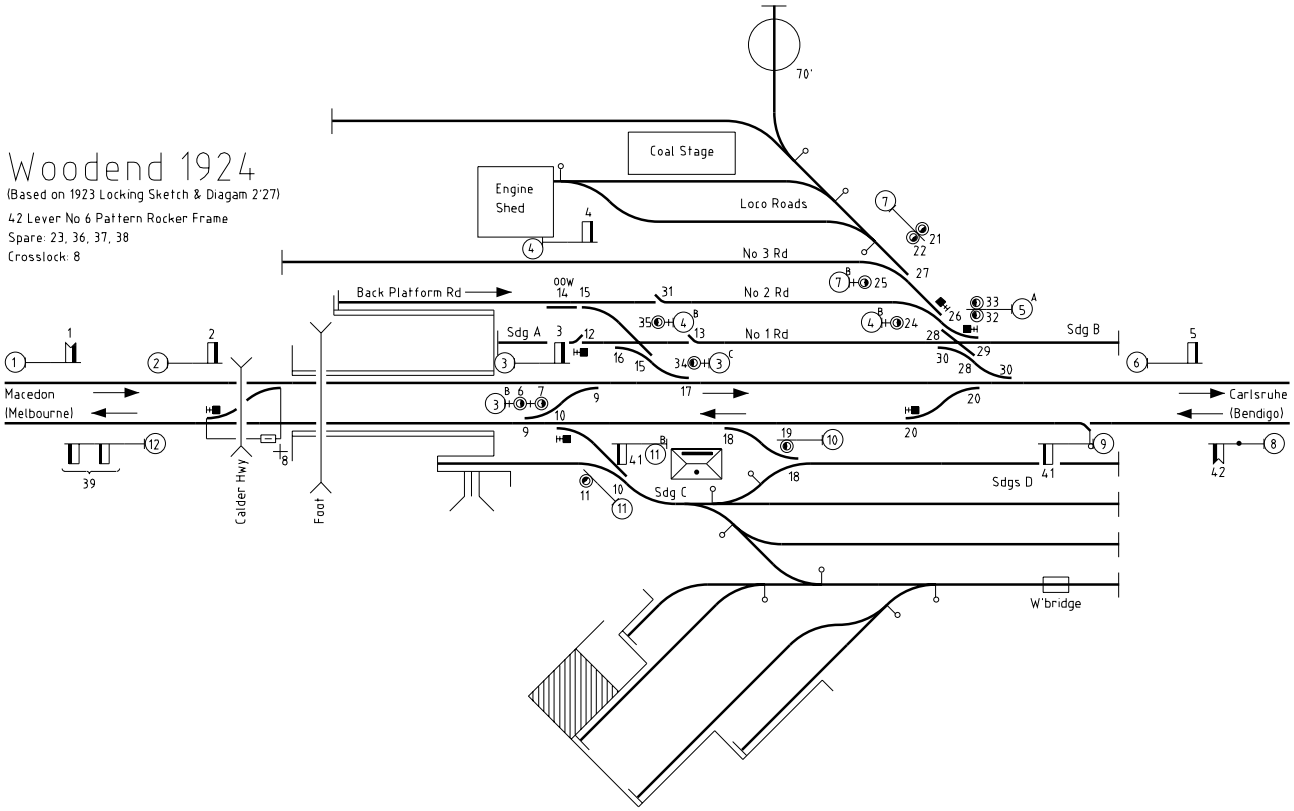

(16.06.1925) Established as Block terminal on Down (in clear weather only) (Up Block Terminal conditions probably established in 1922) (WN 24)

18.07.1930 Signalman will be used on other duties at the station during slack periods of the day (1030-1230 Th&S, 1330 M, Tu, F, & 1335 W). Signalman on either side and Centrol advised before leaving the signalbox. Signals to be left at Stop. (SS)

11.02.1932 Locking altered. Home 2 no longer locks Points 20 & 30 normal (LS)

(09.08.1932) Before accepting Up goods hauled by 'C' class locos with load exceeding 850 tons, line must be clear to Up Starting signal to avoid bringing such trains to a stand on the 1 in 74 rising grade approaching Home 41.

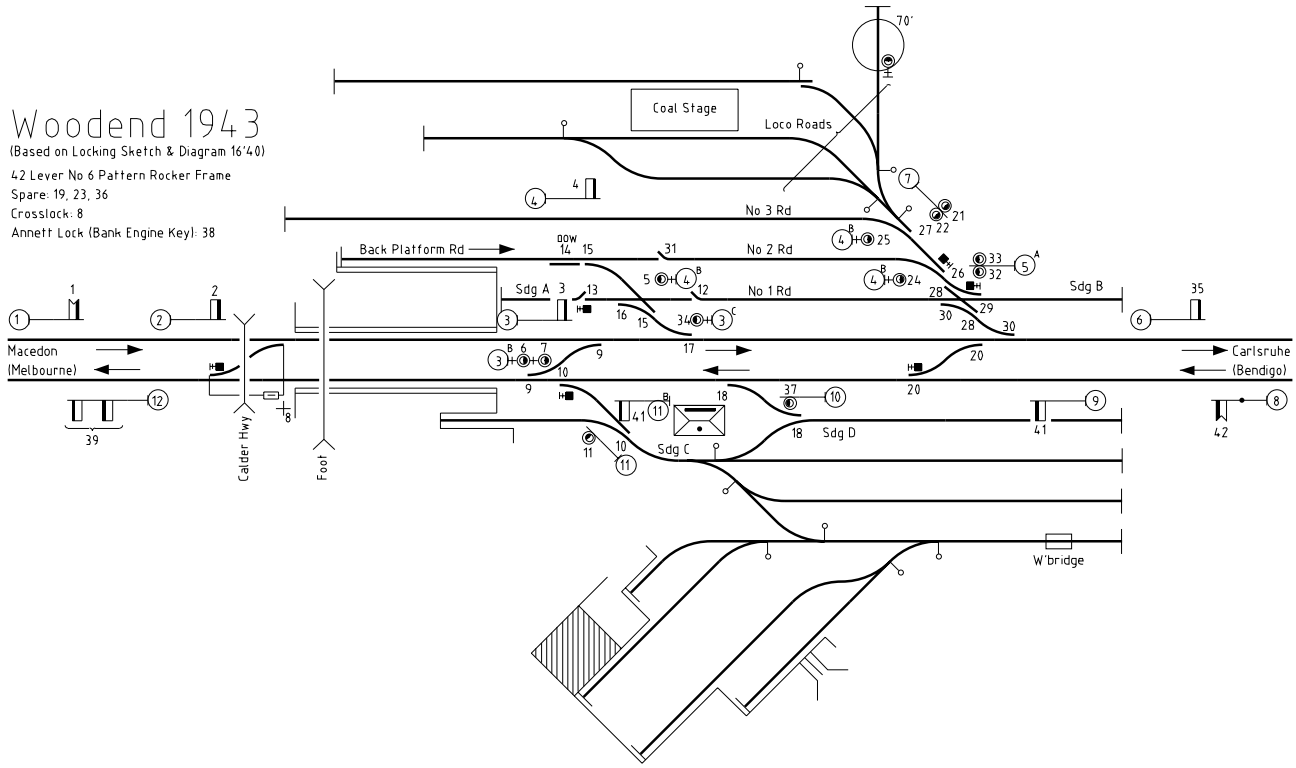

Home 41 must be cleared as soon as the train has passed the Up Distant. (WN 33*)
(05.12.1933) Bank Engine Key provided (to Stop Board at 46 miles 25 chains). Key kept in Annett Lock on lever 38. Withdrawal of key secures 38 reverse. (WN 49* LS & IR have Annett Lock provided on 23.11)
06.03.1935 Catch Points in Up line at 48 miles 75 chains 01 links removed (WN 13)
24.10.1943 Signal box foundations renewed between 0005 and 1800. Levers rearranged. Catches 12 and 13 reversed. Home 5 and Disc 35 exchanged levers. Disc 19 now worked by lever 37 (LS, IR, A 1032)
27.07.1944 Wire adjusting apparatus provided on lever 41 (CI)
14.11.1944 Post 3 replaced by lop mast (WN 47)
(26.03.1946) Turntable disc abolished (WN 13)
20.06.1947 Post 1 replaced by a new post 177 yards further out. Repeater provided. (WN 25, CI)
22.04.1948 Point rodding at Down end of signal box covered (CI)
(b1953) Special instruction: any train assisted to Malmsbury or Kyneton must not be accepted until line is clear to Post 12. Home is to be cleared as soon as engine passes distant. Also the Guard of any train that stops at Down platform to use telephone to notify Signalman that train is complete (also in 1979 GA). (GA)
13.08.1955 Switch out facilities provided. Block hours 0255 Monday to clearance of last train Sat. (WN 33, CI)
13.12.1960 Up end crossover removed. Lever 8 spare. (WN 1*, LS, IR)
14.08.1961 Telegraph instrument removed (WN 34*)
11.01.1962 Post 12 renewed (CI)
30.05.1962 Post 9 renewed (CI)
31.05.1962 Post 11B renewed (CI)
06.09.1962 Post 2 renewed (CI)
31.08.1976 Bank Engine Key removed. Annett Lock on lever 38 removed and lever sleeved normal (LS)
04.04.1978 Points 18U abolished. Disc 37 (Post 10) was probably abolished at this time. (WN 15)
01.05.1979 Home 40 electrically lit (6H706) (LS, WN 19)
16.08.1979 Post 3 moved 13 yards in Down direction and placed on Down end of platform (WN 35)
23.12.1980 Distants 1 & 42 electrically lit (6H706) (LS, WN 4*)
19.02.1984 Home 3 electrically lit (7H706) (LS)
03.04.1984 Home 35 electrically lit (6H706) (LS, WN 16 has Homes 35 & 39 electrically lit on this date)
19.07.1984 Home 41 electrically lit (7H706) (LS, WN 30 has Homes 3 & 41 electrically lit on this date)
03.08.1984 Homes 39 electrically lit (6H706) (LS)
(31.10.1984) Box diagram signed showing removal of lead from Back Platform Road to Down line. Points 15, 16 and 17 removed. Lockbar 14 removed. Note: Catches 12, 13, & 31 remain, as does Discs 5 and 34, and Home 4. This lead still physically in existence 18.4.1988, and levers not removed from frame. (Box Diagram)
14.02.1990 Sidings A, B, C and Nos 1 - 3 Roads abolished. Crossovers 9 & 20 and Points 30 disconnected from frame and converted to hand operation by WSa levers and secured by Hand Locking Bar and Padlock. Derail provided on lead from Loco Road. Points 10, 26, 27, 28, & 29 abolished. Catches 12, 13, and 31 abolished. Posts 3, 3B, 3C, 4, 4B, 5, 5B, 7, 7B, 11, and 11B abolished. Levers 3 & 40 became pilot levers. Levers 4-7, 9-13, 20-22, 24-33 sleeved normal (WN 8)

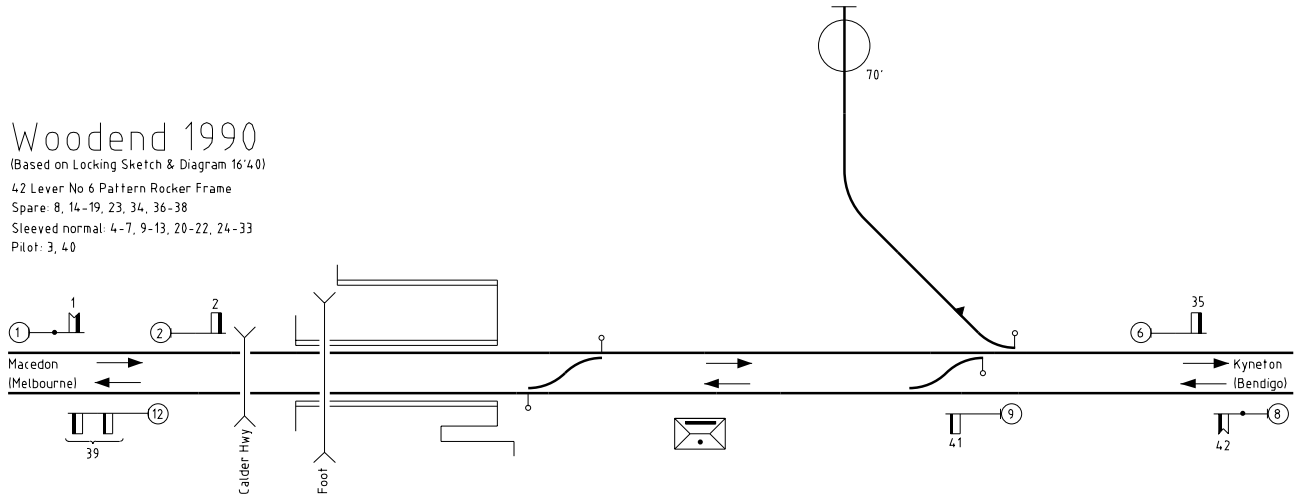

01.02.1995 Post 9 relocated to be 200m from Crossover 9 (WN 5)
02.02.1995 Post 6 relocated to be 200m from Crossover 9 (WN 5)

 Copyright 2001, Andrew Waugh

14.03.1995 Signalbox replaced by signalbay on Up platform. Existing 42 lever Rocker frame replaced by 6 lever B Pattern frame ex Macedon. Frame only works signals; remaining crossover still worked by hand. Turntable road and Down end crossover removed by this date. Up distant on Post 8 converted to a light signal (WN 11)

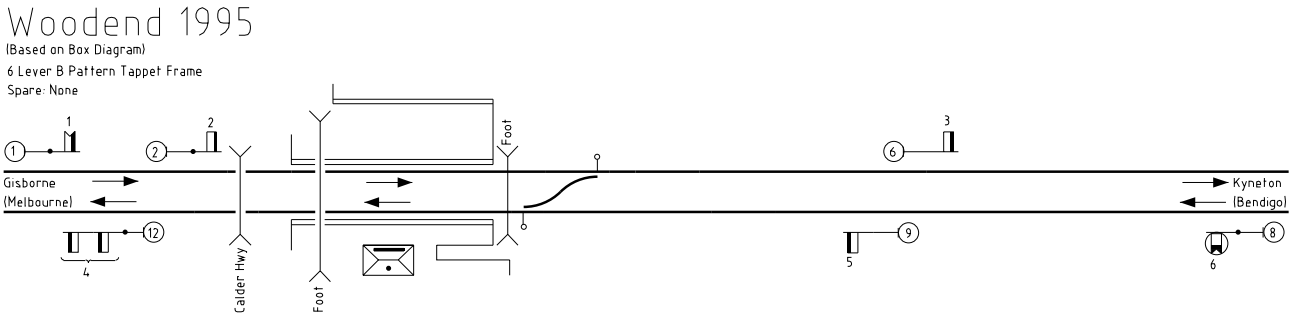

TYLDEN ROAD (49 MILES 39 CHAINS)

(04.09.1905) No 20 gate (probably the crossing at 49 miles 39 chains 79 links) replaced by cattle grids (WN 36)
19.06.1967 Flashing lights provided at Tylden Road (49 miles 39 chains) (WN 26)
06.02.1999 Boom barriers provided at Tylden Road (79.658 km) (WN 4)